UNIVERSITY OF CAMBRIDGE INTERNATIONAL EXAMINATIONS
General Certificate of Education Advanced Level

CANDIDATE NAME									
CENTRE NUMBER						CANDIDATE NUMBER				

0672696684

PHYSICS **9702/53**

Paper 5 Planning, Analysis and Evaluation **October/November 2010**

1 hour 15 minutes

Candidates answer on the Question Paper.

No Additional Materials are required.

READ THESE INSTRUCTIONS FIRST

Write your Centre number, candidate number and name on all the work you hand in.
Write in dark blue or black pen.
You may use a soft pencil for any diagrams, graphs or rough working.
Do not use staples, paper clips, highlighters, glue or correction fluid.
DO **NOT** WRITE IN ANY BARCODES.

Answer **all** questions.
You may lose marks if you do not show your working or if you do not use appropriate units.

At the end of the examination, fasten all your work securely together.
The number of marks is given in brackets [ ] at the end of each question or part question.

For Examiner's Use	
1	
2	
Total	

This document consists of **8** printed pages.

© UCLES 2010

1 A student wishes to determine the resistivity of aluminium.

For Examiner's Use

The resistivity ρ of a conductor is defined as

$$\rho = \frac{RA}{l}$$

for a conductor of resistance R, cross-sectional area A and length l.

Fig. 1.1 shows the typical dimensions of a strip of aluminium of lengths c, d and t. The resistivity of aluminium is about $10^{-8}\,\Omega$m.

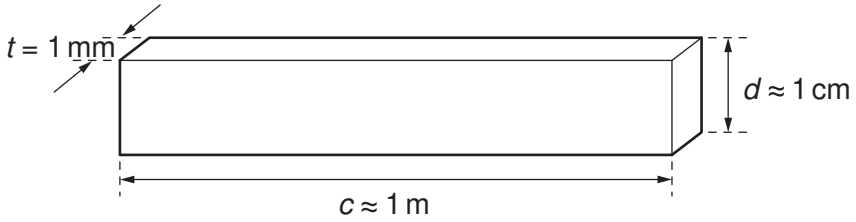

Fig. 1.1 (not to scale)

Design a laboratory experiment to determine the resistivity of aluminium using this strip. The usual apparatus of a school laboratory is available, including a metal cutter.

You should draw a diagram, on page 3, showing the arrangement of your equipment. In your account you should pay particular attention to

(a) the procedure to be followed,

(b) the measurements to be taken,

(c) the control of variables,

(d) the analysis of the data,

(e) the safety precautions to be taken.

[15]

© UCLES 2010

Diagram

For Examiner's Use

.....

.....

.....

.....

.....

.....

.....

.....

.....

.....

.....

.....

.....

.....

For Examiner's Use

For Examiner's Use	Defining the problem	Methods of data collection	Method of analysis	Safety considerations	Additional detail

2 A student is investigating how the discharge of a capacitor through a resistor depends on the resistance of the resistor.

For Examiner's Use

The equipment is set up as shown in Fig. 2.1.

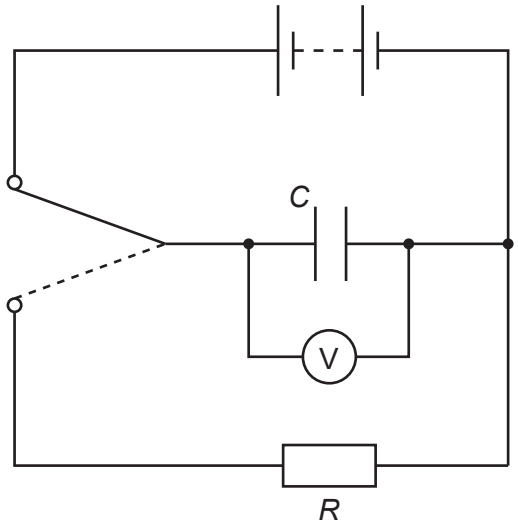

Fig. 2.1

The student charges the capacitor of capacitance *C* and then discharges it through a resistor of resistance *R*. After 15.0 s the student records the potential difference *V* across the capacitor. The student repeats this procedure for different values of *R*.

Question 2 continues on the next page.

For Examiner's Use

It is suggested that V and R are related by the equation

$$V = V_0 e^{-\frac{t}{CR}}$$

where V_0 is the initial potential difference across the capacitor and t is the time over which the capacitor has discharged.

(a) A graph is plotted of ln V on the y-axis against $\frac{1}{R}$ on the x-axis. Express the gradient in terms of C.

gradient = ... [1]

(b) Values of R and V for $t = 15.0$ s are given in Fig. 2.2.

R/kΩ	V/V	$\frac{1}{R}/10^{-6}\ \Omega^{-1}$	ln (V/V)
6.67	3.6 ± 0.2		
10.0	5.0 ± 0.2		
15.0	6.4 ± 0.2		
20.0	7.2 ± 0.2		
30.0	8.0 ± 0.2		

Fig. 2.2

Calculate and record values of $\frac{1}{R}/10^{-6}\ \Omega^{-1}$ and ln (V/V) in Fig. 2.2. Include the absolute uncertainties in ln (V/V). [3]

(c) (i) Plot a graph of ln (V/V) against $\frac{1}{R}/10^{-6}\ \Omega^{-1}$. Include error bars for ln (V/V). [2]

(ii) Draw the straight line of best fit and a worst acceptable straight line on your graph. Both lines should be clearly labelled. [2]

(iii) Determine the gradient of the line of best fit. Include the uncertainty in your answer.

gradient = ... [2]

© UCLES 2010

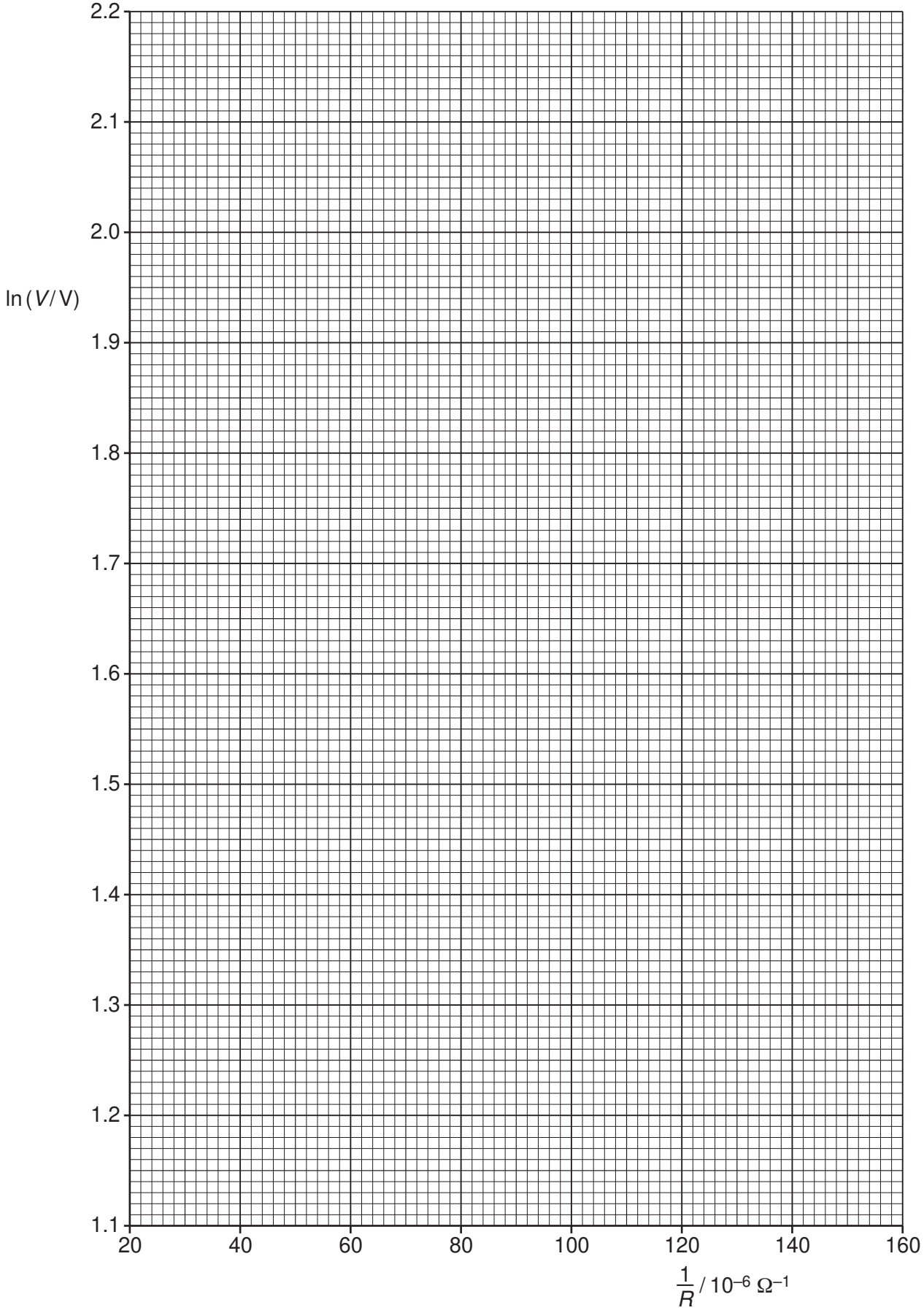

For Examiner's Use

(d) (i) Using your answer to **(c)(iii)**, determine the value of C. Include an appropriate unit.

For Examiner's Use

C = ... [2]

(ii) Determine the percentage uncertainty in your value of C.

percentage uncertainty = ... [1]

(e) Determine the value of R for which the capacitor will discharge to 10% of its original potential difference in 15.0 s. Include the absolute uncertainty in your answer.

R = ... Ω [2]

Permission to reproduce items where third-party owned material protected by copyright is included has been sought and cleared where possible. Every reasonable effort has been made by the publisher (UCLES) to trace copyright holders, but if any items requiring clearance have unwittingly been included, the publisher will be pleased to make amends at the earliest possible opportunity.

University of Cambridge International Examinations is part of the Cambridge Assessment Group. Cambridge Assessment is the brand name of University of Cambridge Local Examinations Syndicate (UCLES), which is itself a department of the University of Cambridge.